TOWN OF FRONT ROYAL
CONCRETE PAD FOUNDATION
PAD-MOUNTED TRANSFORMER
750 TO 3000 KVA, THREE-PHASE
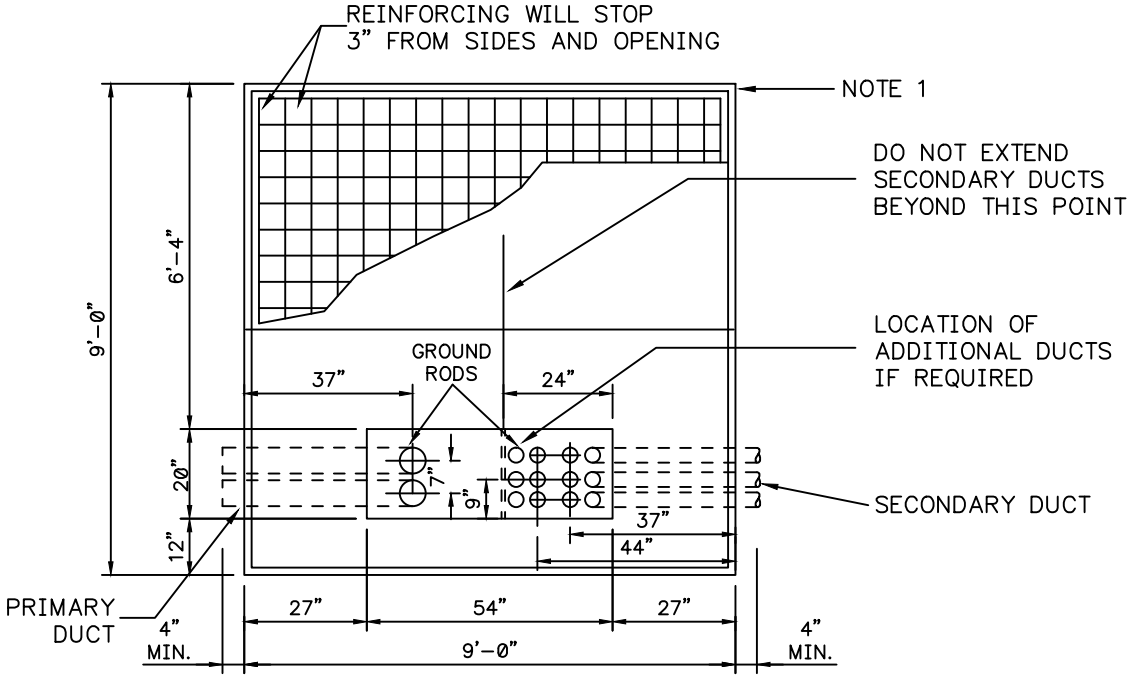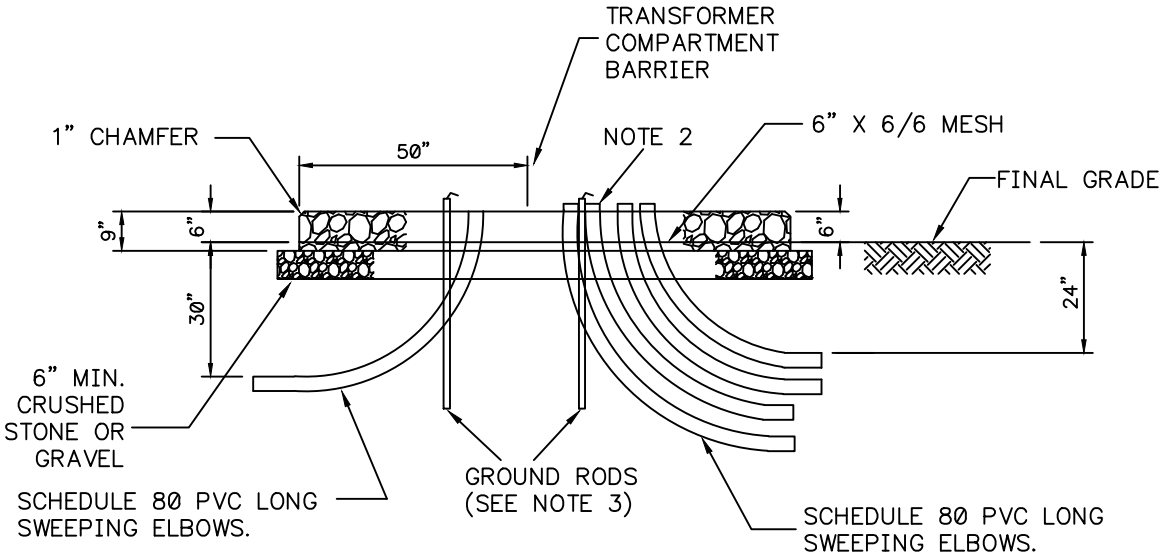
IMPORTANT: CONSULT ENERGY SERVICES FOR DETAILS BEFORE INSTALLATION.